# STARLOG

# Pressure Transducers

**Model 7420**
**Model 7421**

# Table of Contents

# 1. INTRODUCTION

The Pressure Transducers (Model 7420 and 7421) from UNIDATA provide a voltage signal that is analogous to the pressure applied to the pressure sensor. They connect directly to a STARLOG Model 7000 MACRO Data Logger (or via an amplifier to a Model 6003 Portable Data Logger).

The Model 7420 Pressure Transducer is an extremely high accuracy, rugged, all solid state transducer It can be used for various applications monitoring gaseous or liquid pressures.

The Model 7421 Pressure Transducer has been specifically designed for depth measurement in small bore holes, reservoirs, the sea and many other applications. The titanium body and pressure fittings are electron beam welded, and a polyurethance sheathed cable is moulded to the body to complete the waterproof rugged assembly.

These transducers are temperature compensated and use a 316 stainless steel diaphram. They are manufactured by Druck and are delivered factory calibrated (with calibration certificate).

These Transducers are available in a range of models, each model has a different measurable maximum pressure. These models are:

Model

Range

Application

7420B

0 to 50 kPa

Gauge

7420C

0 to 100 kPa

Gauge

7420D

0 to 200 kPa

Gauge

7420E

0 to 500 kPa

Gauge

7420F

0 to 1000 kPa

Gauge

7420G

0 to 2000 kPa

Gauge

7421B

0 to 5 metres

Vented Gauge for Water Depth

7421C

0 to 10 metres

Vented Gauge for Water Depth

7421D

0 to 20 metres

Vented Gauge for Water Depth

The Pressure Transducer uses one analog channel. The instrument is self powered from the Data Logger and consumes 5mA which is approximately 5% of a standard alkaline battery pack.

## Also Available

UNIDATA also offer a Model 6512 series of Pressure Transmitter. These instruments are packaged with compensation circuitry and signal amplifiers in a small weatherproof enclosure.

# 2. STARLOG SCHEME INFORMATION

UNIDATA's instruments are designed for automatic monitoring and collection of data in a STARLOG Data Logging System. When the instruments are connected to a STARLOG MACRO or Portable Data Logger, data sensed by the instruments is logged and stored according to a program you define using the STARLOG Software Package.

The STARLOG Software Package runs on a computer compatible with IBM systems (PC/XT/AT, PS/2). This package includes a menu-driven program so that you can easily generate a data logging program – called a Scheme – then load the Scheme into a Data Logger. To discover how to use this program see the STARLOG Users Manual (manual 6203).

This section provides you with information you will find helpful in creating and executing a Pressure Monitoring Scheme. The examples illustrate Software Version 2.02.

## 2.1. Whether to use a Portable or a MACRO Data Logger

The Pressure Transducers (models 7420 and 7421) can be connected directly to a Model 7000 MACRO Data Logger using a high resolution differential analog channel. They are powered either by the scan synchronised power source (+5V regulated) or by one of the User Power Supplies (+10V regulated) The +10V UPS allows for a higher output signal and hence an increased resolution (2 X greater than with the +5V source). Using the +10V UPS increases battery consumption by 30%.

It is also possible to connect the transducers to a Portable Data Logger using a Model 6103 Field Termination Strip and a 6106A Differential Input Amplifier Module.

## 2.2. Adding the Pressure Transducer to a Scheme

From the **Maintain Schemes** option in the **Main Menu**, you define the scheme.

When you define your pressure data logging scheme, ensure that you choose the correct model from the list of instruments by checking the Model Number on the Transducer you are using.

## 2.2.1. Adding an Instrument

When you add the correct Instrument, this selects the correct range.

From the Instrument List, select the instrument you are using. Each variation is listed separately in the list.

Choose one:

Choose an Instrument to Add

Hardware Details

**Communication**

**Site Identification**
**Data Logger**
**Maintain Instruments**

Maintain Instruments

**List all Transducers**
**Remove a Transducer**
**Edit a Transducer**
**Add an Instrument**

| | |
|---|---|
| **7420B** | **Pressure Instrument – 50 kPa** |
| **7420C** | **Pressure Instrument – 100 kPa** |
| **7420D** | **Pressure Instrument – 200 kPa** |
| **7420E** | **Pressure Instrument – 500 kPa** |
| **7420F** | **Pressure Instrument – 1000 kPa** |
| **7420G** | **Pressure Instrument – 2000 kPa** |
| **7421B** | **Pressure Instrument – 0 to 5 metres** |
| **7421C** | **Pressure Instrument – 0 to 10 metres** |
| **7421D** | **Pressure Instrument – 0 to 20 metres** |

When you add a Pressure Transducer to a Scheme, the default channel is: high resolution Analog Channel 0 (h0).

The Pressure Transducer has the following attributes:

Edit a Transducer

| | | |
|---|---|---|
| **Transducer Description** | **50 kPa Gauge Press** | |
| **Input Channel** | **h0** | **analog 0 (16 bit)** |
| **Input Channel Range mV** | **0 to 500** | |
| **Transducer Range mV** | **0 to 103.7** | |
| **Transducer Scaling/Formula** | **0 to 50** | |
| **Title for Reports** | | **Press** |
| **Units of Result** | **kPa** | |
| **Using String** | **####** | |

Set the scaling to equal the range.

Set this range from the "Span" listed on the calibration sheet. (See sec. 2.3.1.)

Refer to the connections information in the next section for the Data Logger pin and Field Termination Strip terminal assignments for Analog channels. If you

have connected a probe to other channels, then you need to **Edit a Transducer** and change its **Input Channel** to the appropriate one.

The connection details in Section 3 assume you are using these defaults.

## 2.3. MACRO Logger Configuration Settings

From the **Maintain MACRO Loggers** menus, you will want to set the:

- Channel Input Range **Channel 0 -–7 Drive Table**
- User Power Supply OnTime **General Details**

### 2.3.1. The Channel Input Range and Scaling

Drive Table

| | | |
|---|---|---|
| **Channel 0** | **0 to 500** | **Differential** |

Other details needed to correctly scale the data received by this transducer must be added to the **Edit a[redacted]er** menu (see page 3). In this menu, you will want to set the Transducer Range according to the “Span” recorded on the calibration sheet accompanying each transducer.

### 2.3.2. User Power Supply

The Pressure Transducer must be switched on every scan. If it is powered from the +10V User Power Supply, you will want to set the On Time to 1.

Both the Prescan and Off Time should be 0.

General Details

| | |
|---|---|
| **User Power Supply Prescan (s)** | **0** |
| **UPS On Time (scans)** | **1** |
| **UPS Off Time (scans)** | **1** |

## 2.4. Using a Portable Data Logger

If you are using a Portable Data Logger, ensure that the Scan Rate Switch is set correctly (the factory default is 5 seconds). The switch setting should be the same as the Scan Rate set in the Scheme **Hardware Details** menu.

# 3. INSTALLATION

## 3.1. Mounting

These Pressure Transducers use a 316 stainless steel diaphram.

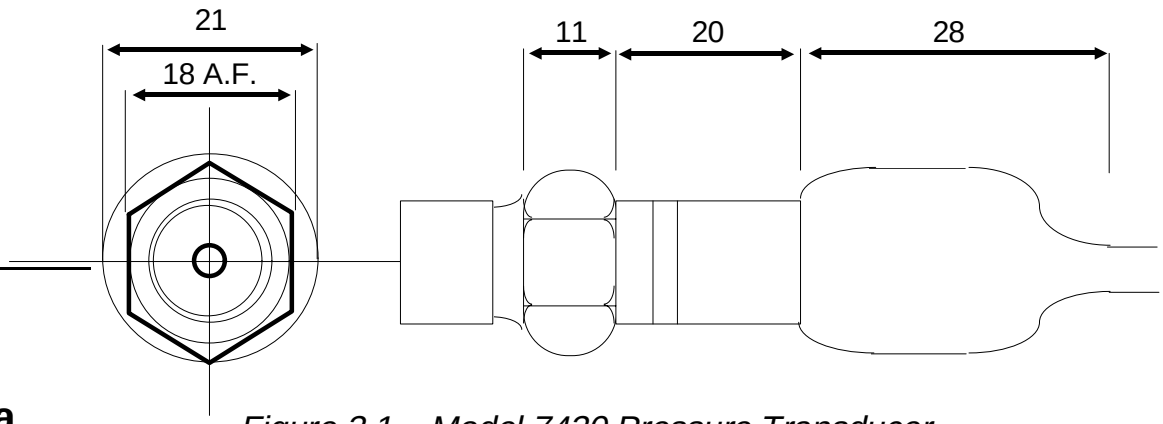


*Figure 3.1 – Model 7420 Pressure Transducer*

## 3.2. Cabling

The cable provided is four core shielded low voltage data cable. See the following section for connections.

The cable length, from the instrument to the Data Logger, should be kept to a minimum to avoid electrical noise and signal fading. (A maximum of 30 metres is recommended).

## 3.3. Connections

The Pressure Transducer is connected to a Data Logger via three input/output wires. The following table lists these connections.

For Portable Data Loggers: Note that pin #19 needs to be connected to ground before the data logger will begin recording data (Log Sense). See the PDL Hardware Supplement (Model 6200) for further details.

Pressure Transmitters

| Portable Data Logger | MACRO Data Logger | Wire | Function | Channel | Pin | FTS |
|---|---|---|---|---|---|---|
| | | blue | +ve to logger | a0* +ve diff | 39 | 20 |
| | | yellow | –ve to logger | a0* –ve diff | 39 | 39 |
| | | white | +5V power or +10V power | | 40 | 1 |
| | | | | | 41 | 41 |

n/a

15†

18
35

49
48

red

Power Gnd

n/a

34

44

» For Portable Data Loggers, you must use a Field Termination Strip (with a Model 6106A Differential Amplifier Module).

There are eight channels available for analog signal inputs on the data logger [pin #1 to #8]. You can choose any one of them. The chosen pin needs to correspond to the **Input Channel** when creating the Scheme (see section 2).

† Terminals 16 and 17 may also be used.

# 4. INSTRUMENT TESTING

The Pressure Transducers can be tested using either the **Test a Logger** menu in STARLOG Software or a Model 6401B Field Test Unit.

## 4.1. Using the Test Menu

1. Load the Pressure Monitoring Scheme into the Logger you are testing. You can do this by selecting **Use A Scheme** from the **Main Menu**, then **Program Logger with Scheme**.
2. From the **Use a Scheme** menu, select **Scheme Test Mode**. The appropriate Test Screen appears.

| | |
|---|---|
| **Scheme Name:** | **Press (kPa):** |
| **Logger State: Primed** | |
| **Log size:** | |
| **Log Interval:** | |
| **Start:** | |

## 4.2. Using the Field Test Unit

Using Analog Channel 0 [pin #1 on PDL]:

1. Connect a Portable Data Logger to the FTU and the Pressure Transducer.
2. VIEW data on Address 16 (for PDL).
3. Define an Entry by pressing E, then:

   OFFSET?0
   BYTES?1
   FORMULA?F(meaning fullscale)
   MIN?0
   MAX?1000kPa(in the case of a 1000kPa transducer)
   USING?####kPa(in the case of a 1000kPa transducer)

# 5. SPECIFICATIONS

## Range

| | |
|---|---|
| Model 7420B | 0 to 50 kPa |
| Model 7420C | 0 to 100 kPa |
| Model 7420D | 0 to 200 kPa |
| Model 7420E | 0 to 500 kPa |
| Model 7420F | 0 to 1000 kPa |
| Model 7420G | 0 to 2000 kPa |
| Model 7421B | 0 to 5 m |
| Model 7421C | 0 to 10 m |
| Model 7421D | 0 to 20 m |

| | |
|---|---|
| Operating Temperature Range: | -20°C to 80°C |
| Compensated Temperature Range: | 0°C to 50°C |
| Resolution: | maximum range of model divided by 256 (PDL)<br>maximum range of model divided by 4096 (MDL) |
| Accuracy: | ±0.5% |
| Non-Linearity: | ±0.1% of full-scale |
| Zero Offset: | ±3mV |
| Response Time: | 1 ms for 10% to 90% change of full scale |
| Output Voltage: | typically 100mV using the +10V supply<br>typically 50mV using the +5V supply |
| Output impedance: | 1000 ohms nominal |
| Supply Voltage: | 10.00 V @15mA max. (ex Data Logger) |
| Power Consumption: | maximum of 9mA |
| Size: | 125mm H, 75mm L, 78mm D |
| Weight: | 100 g |
| Cabling: | 4 core shielded cable |

This page left intentionally blank.